ENGINEERING FOR ADVANCED NEUTRON INSTRUMENATION AND SAMPLE ENVIRONMENT

MECHANICAL DESIGN

15 MAY 2018 I PETER HARBOTT

OUTLINE

- Brief overview organisation Forschungszentrum Jülich
- Mechanical engineering tools
- Manufacturing resources
- Example of a recently built instrument: TOPAS

  Overview

  Detailed design feature
- Questions

ORGANISATIONAL STRUCTURE

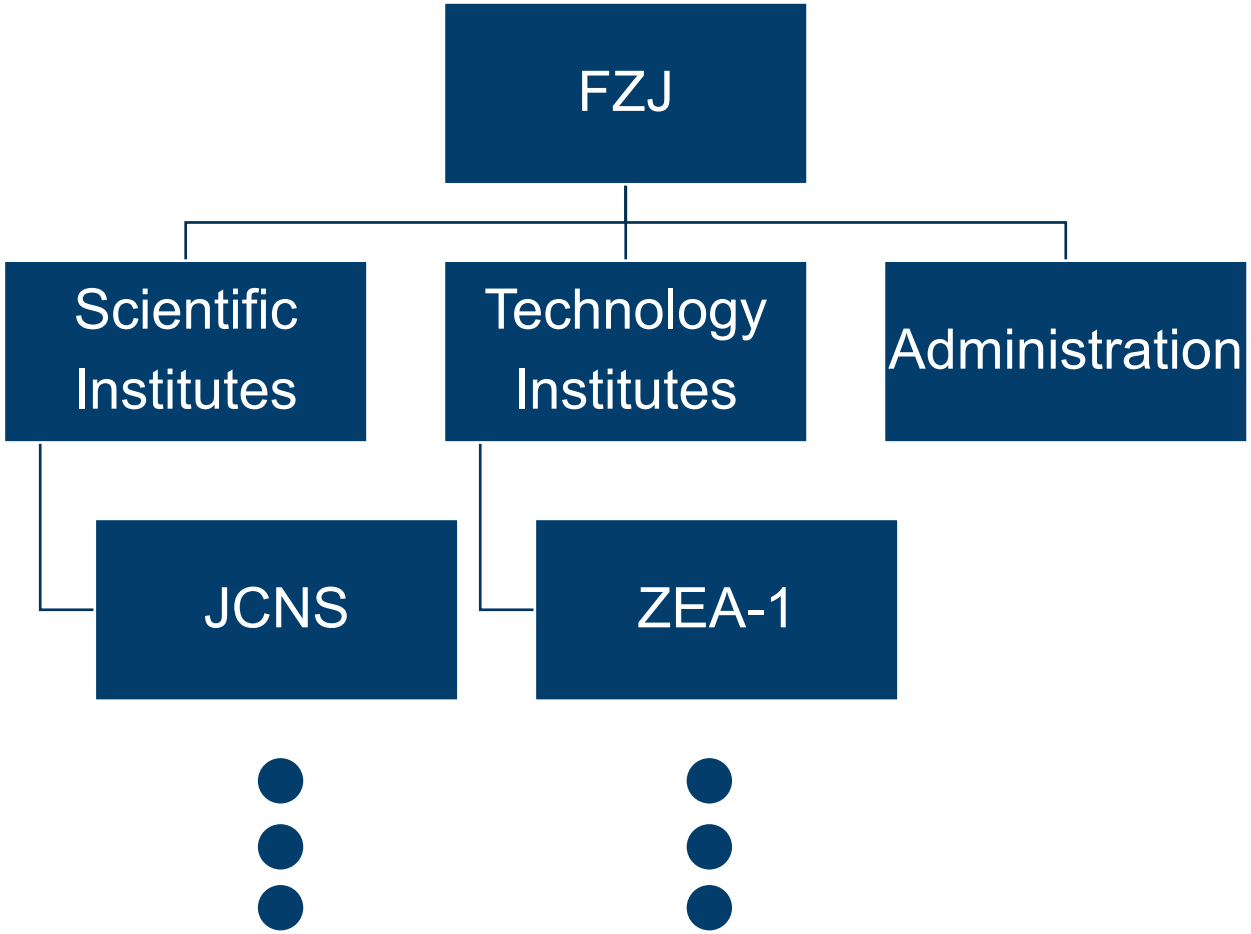

JÜLICH Forschungszentrum

MECHANICAL ENGINEERING TOOLS

Software

- CAD Software
  Catia, Inventor
- Finite Element Software
  Ansys
  LS-Dyna
- Project Management
  MS-Project

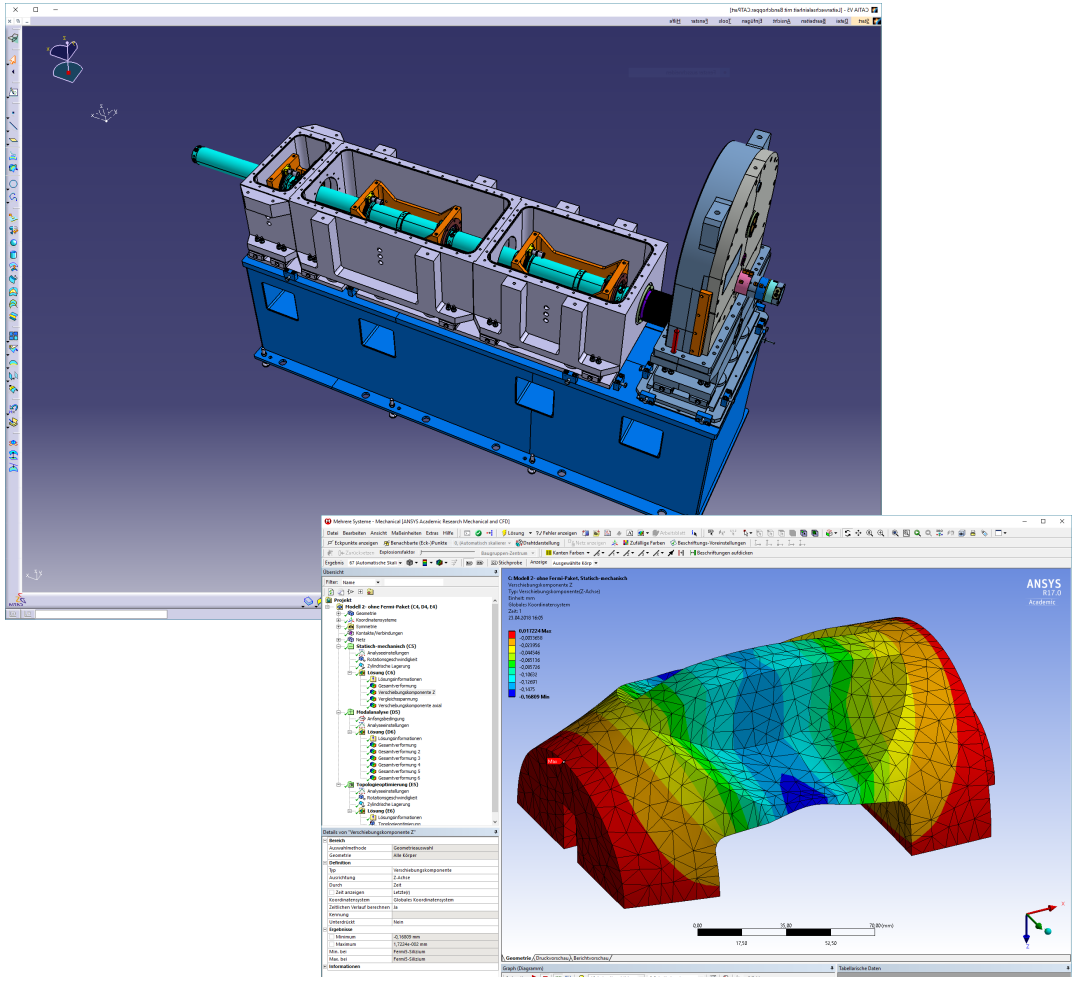

JÜLICH Forschungszentrum

MANUFACTURING RESOURCES

Machining and processing

- Classical cutting processes
  Milling, turning
- Wire and sink erosion
- Welding processes incl.
  Laser welding
  Electron beam welding
  Friction welding
- Ultrasonic milling / grinding
- Glas processing
- Additive manufacturing – 3D-printing

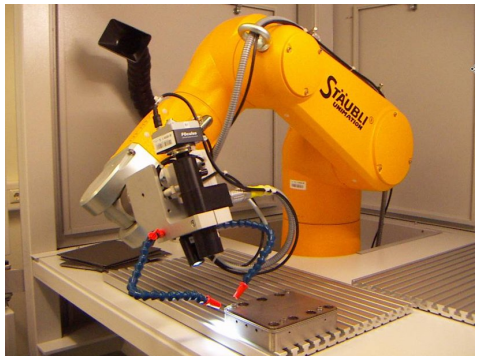

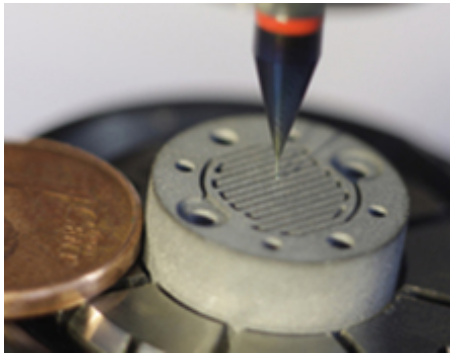

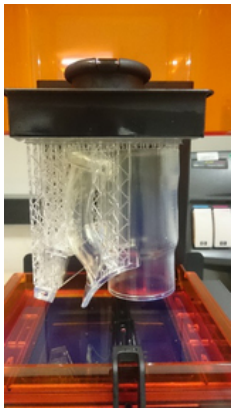

JÜLICH Forschungszentrum

INSTRUMENT EXAMPLE – TOPAS

Time Of Flight Polarization Analysis Spectrometer - Overview

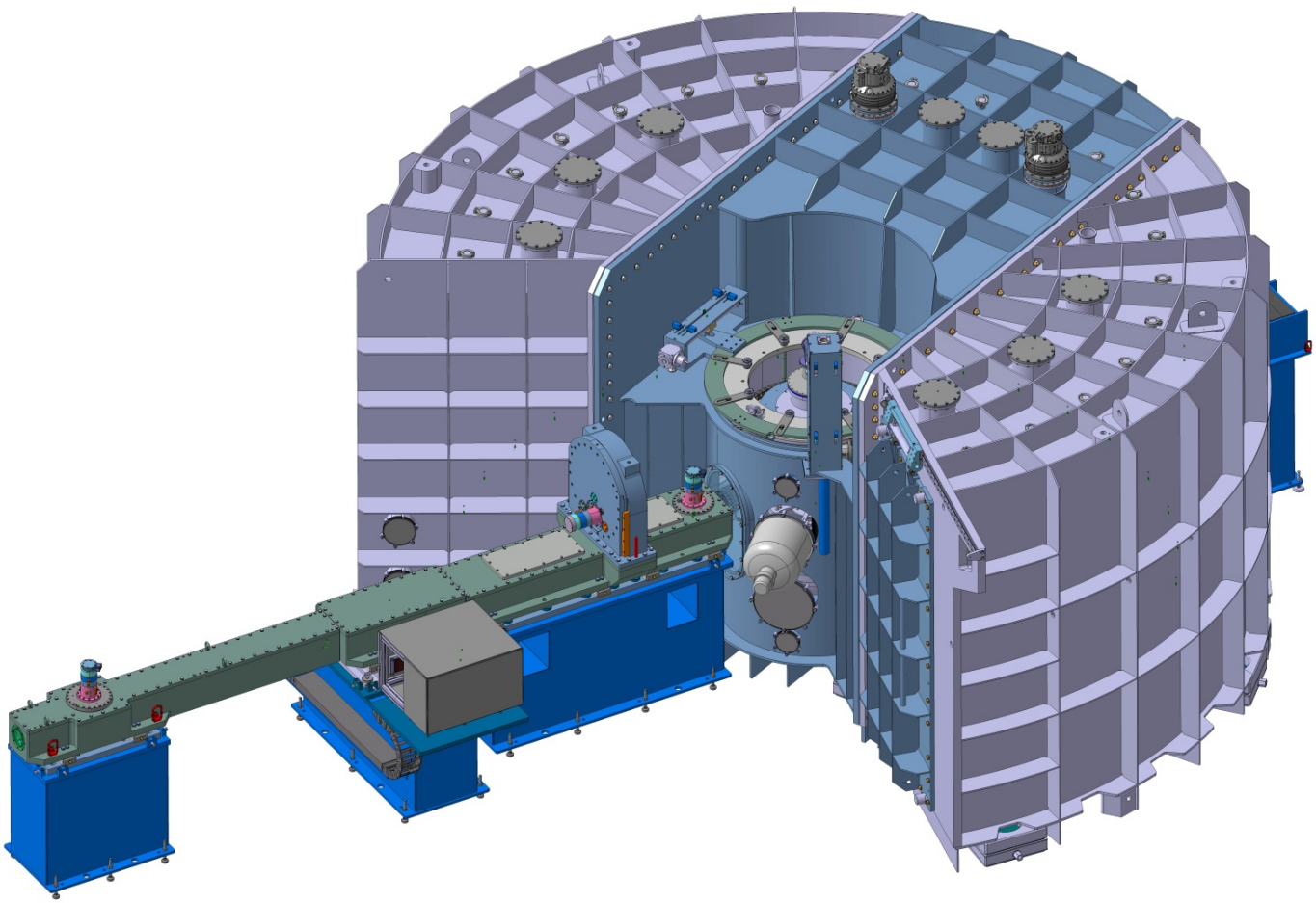

JÜLICH Forschungszentrum

INSTRUMENT EXAMPLE - TOPAS

Vacuum vessel – technical data

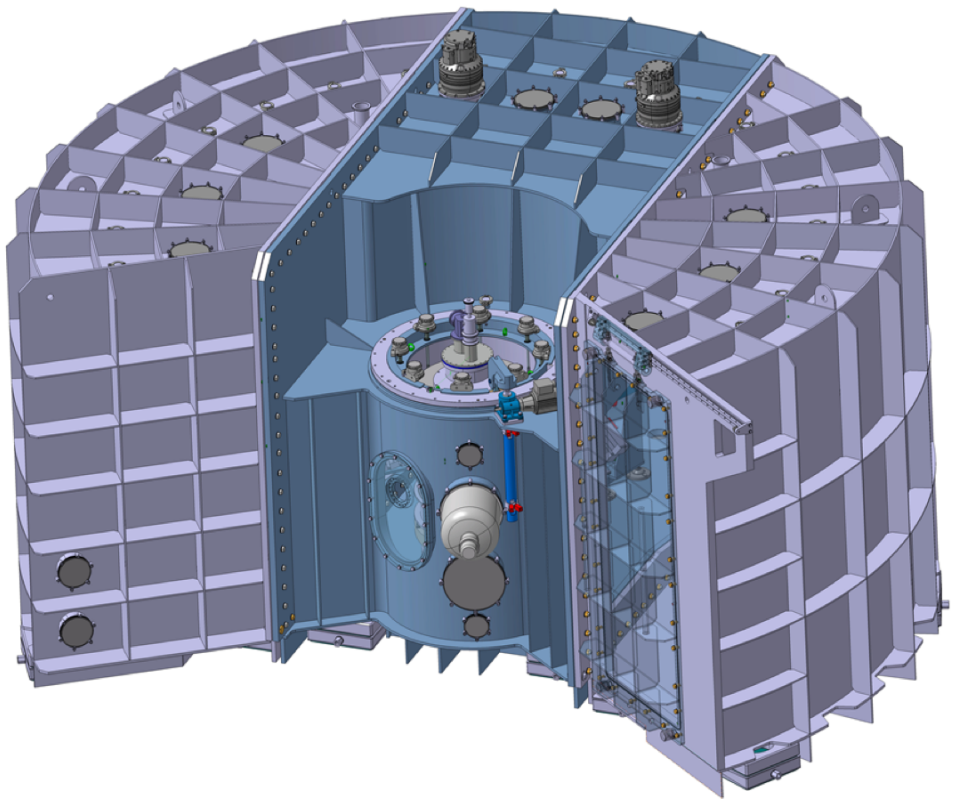

- Material 1.4571 316Ti
  1.4429 316Li
- Diameter 6500 mm
- Height 3200 mm
- Volume 76 m^3
- Cryogenic vacuum < 10^{-5} mbar
- Low magnetic permeability steel in a radius of 1m around sample position

JÜLICH Forschungszentrum

INSTRUMENT EXAMPLE - TOPAS

Vacuum vessel - setup

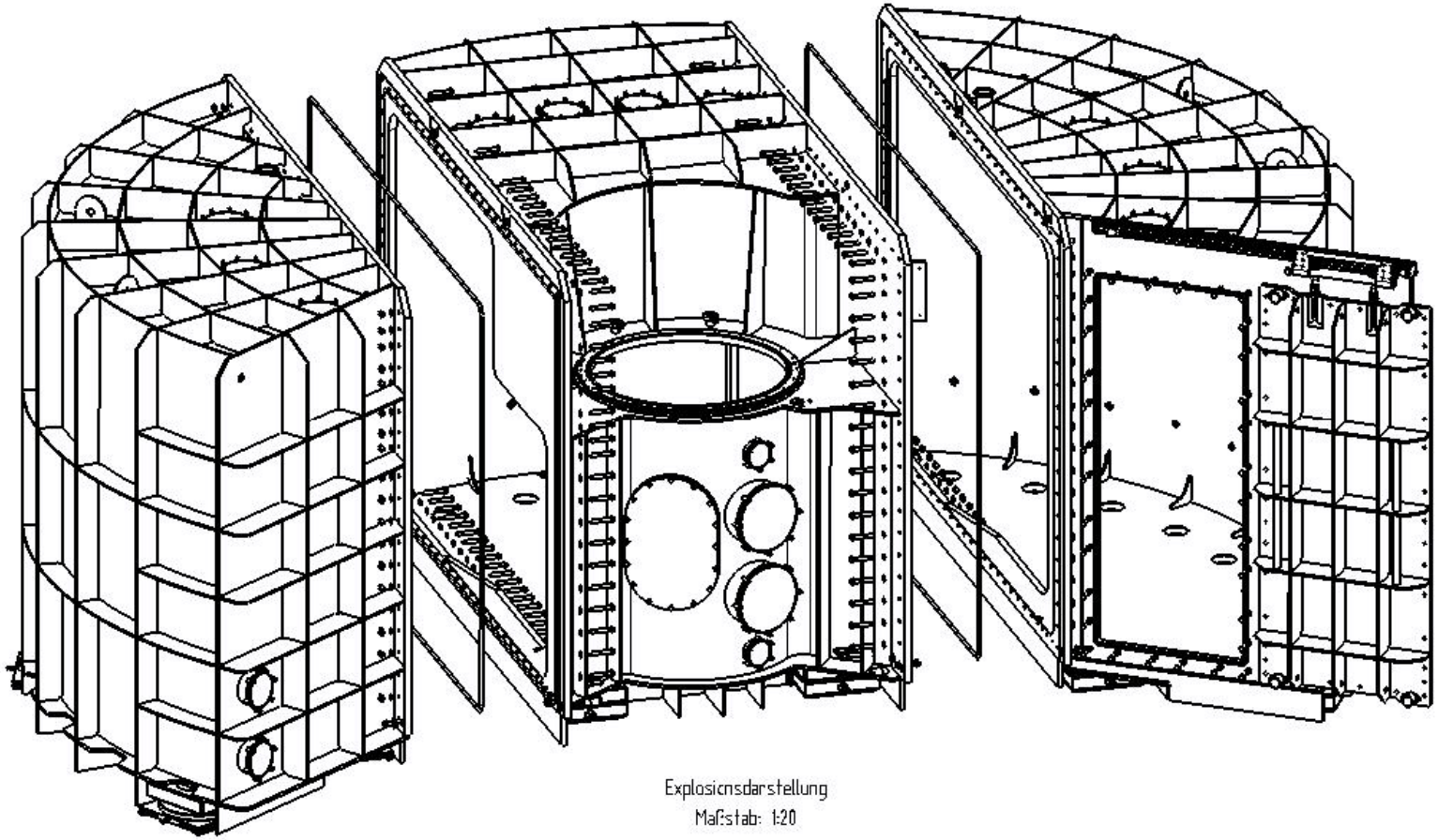

JÜLICH Forschungszentrum

INSTRUMENT EXAMPLE - TOPAS

Vacuum vessel – Finite Element Analysis

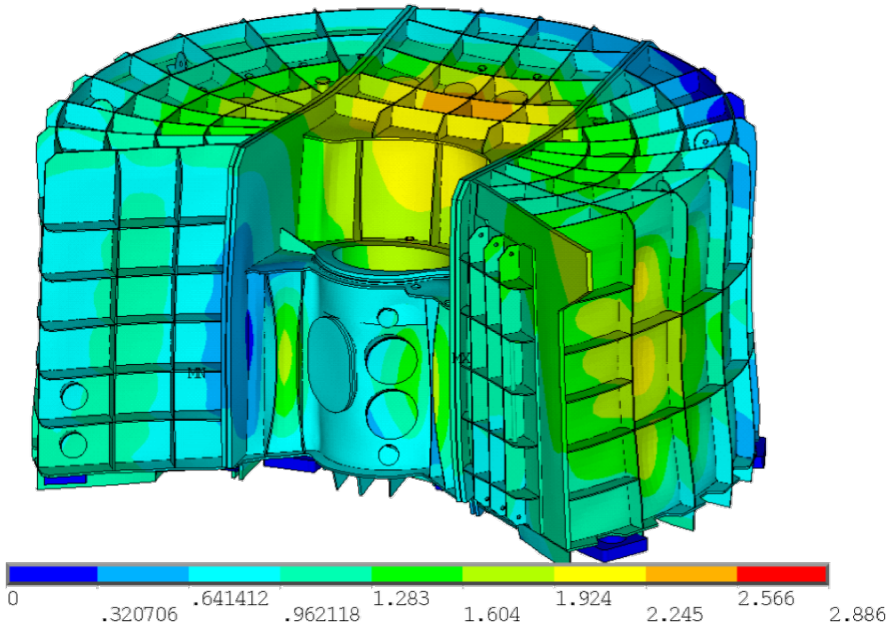

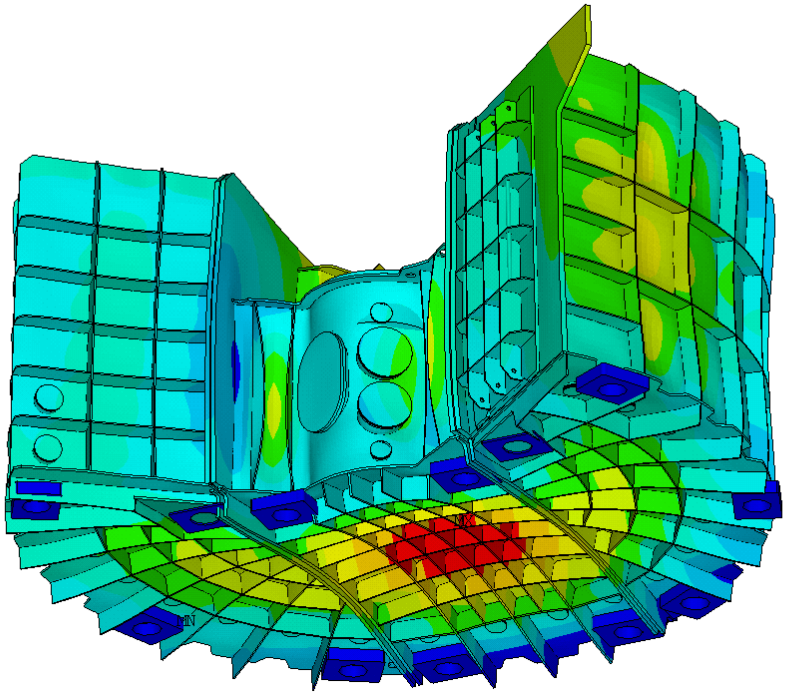

Deformation (mm) under vacuum

JÜLICH Forschungszentrum

INSTRUMENT EXAMPLE - TOPAS

Vacuum vessel – Finite Element Analysis

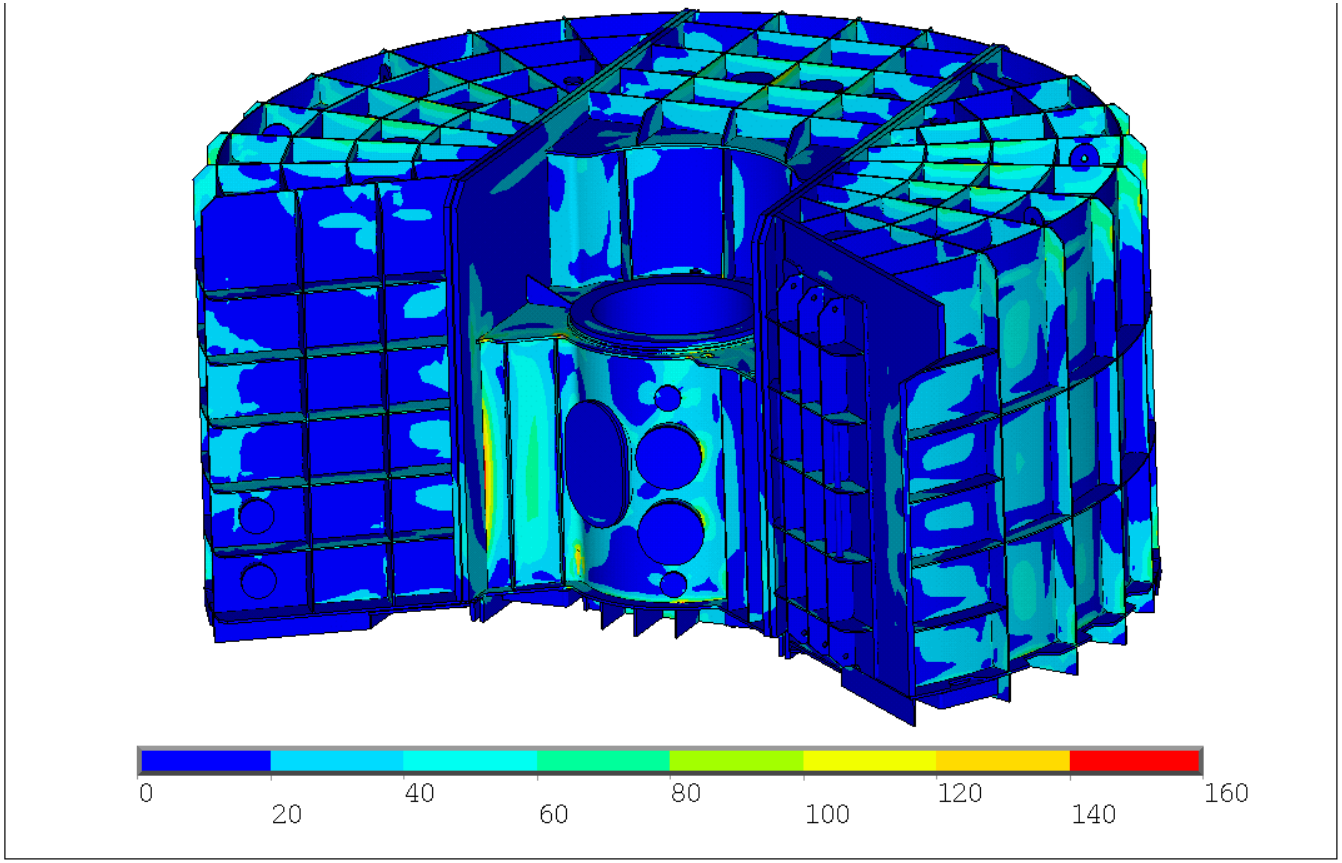

Stresses (N/mm^2) under vacuum

JÜLICH Forschungszentrum

INSTRUMENT EXAMPLE - TOPAS

Vacuum vessel – Specification

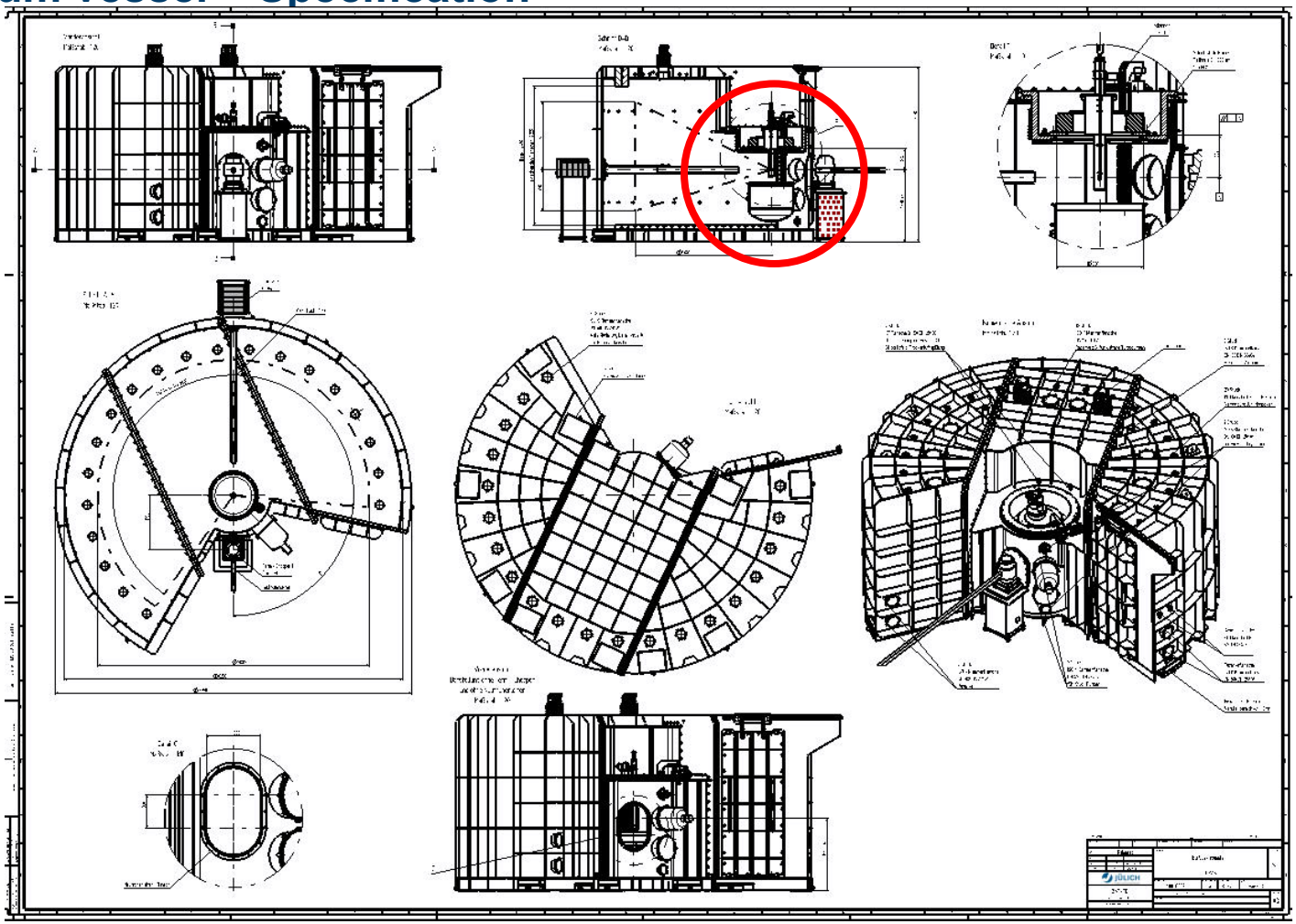

JÜLICH Forschungszentrum

INSTRUMENT EXAMPLE - TOPAS

Vacuum vessel – Sample area

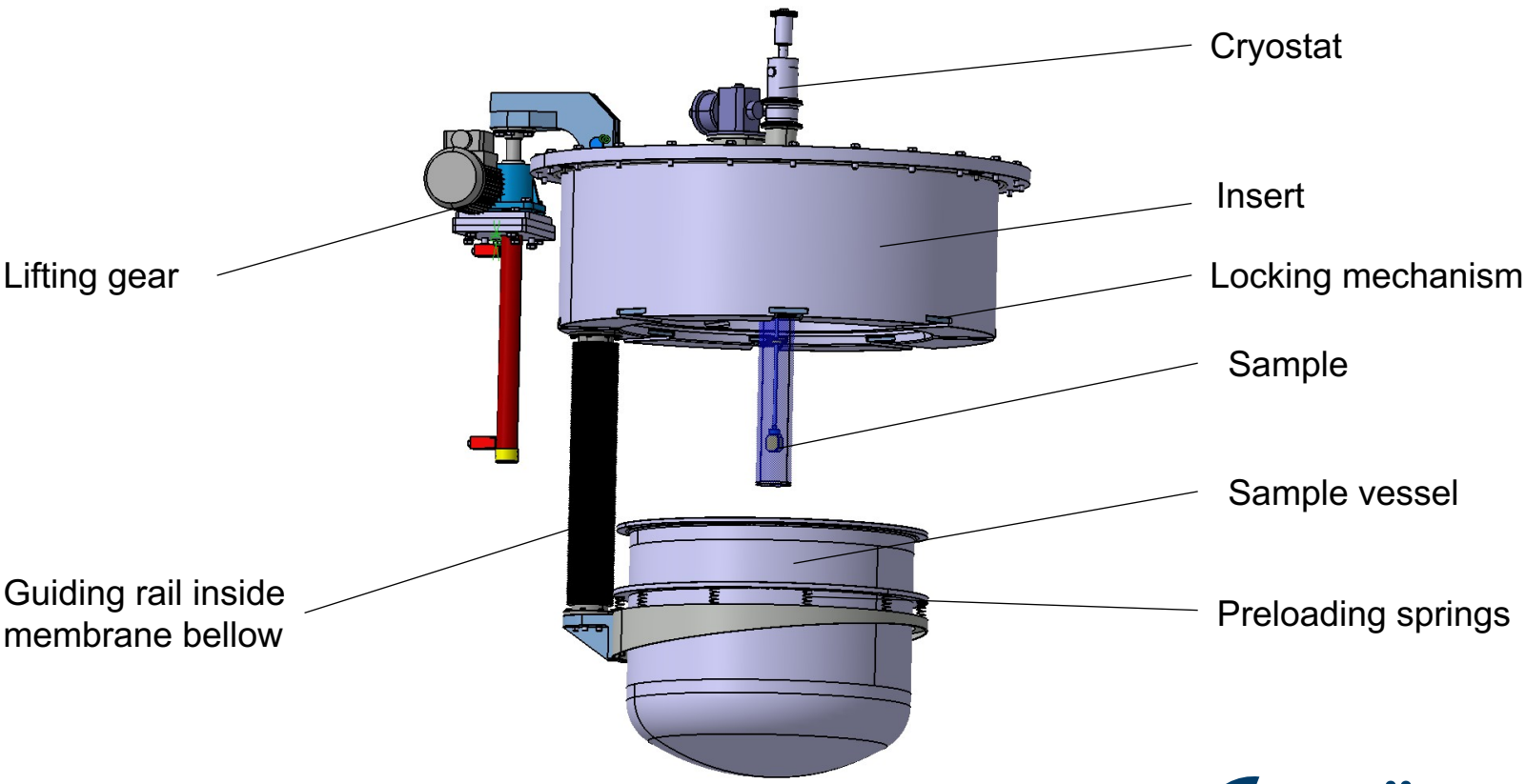

INSTRUMENT EXAMPLES - TOPAS

Cross section through vacuum chamber

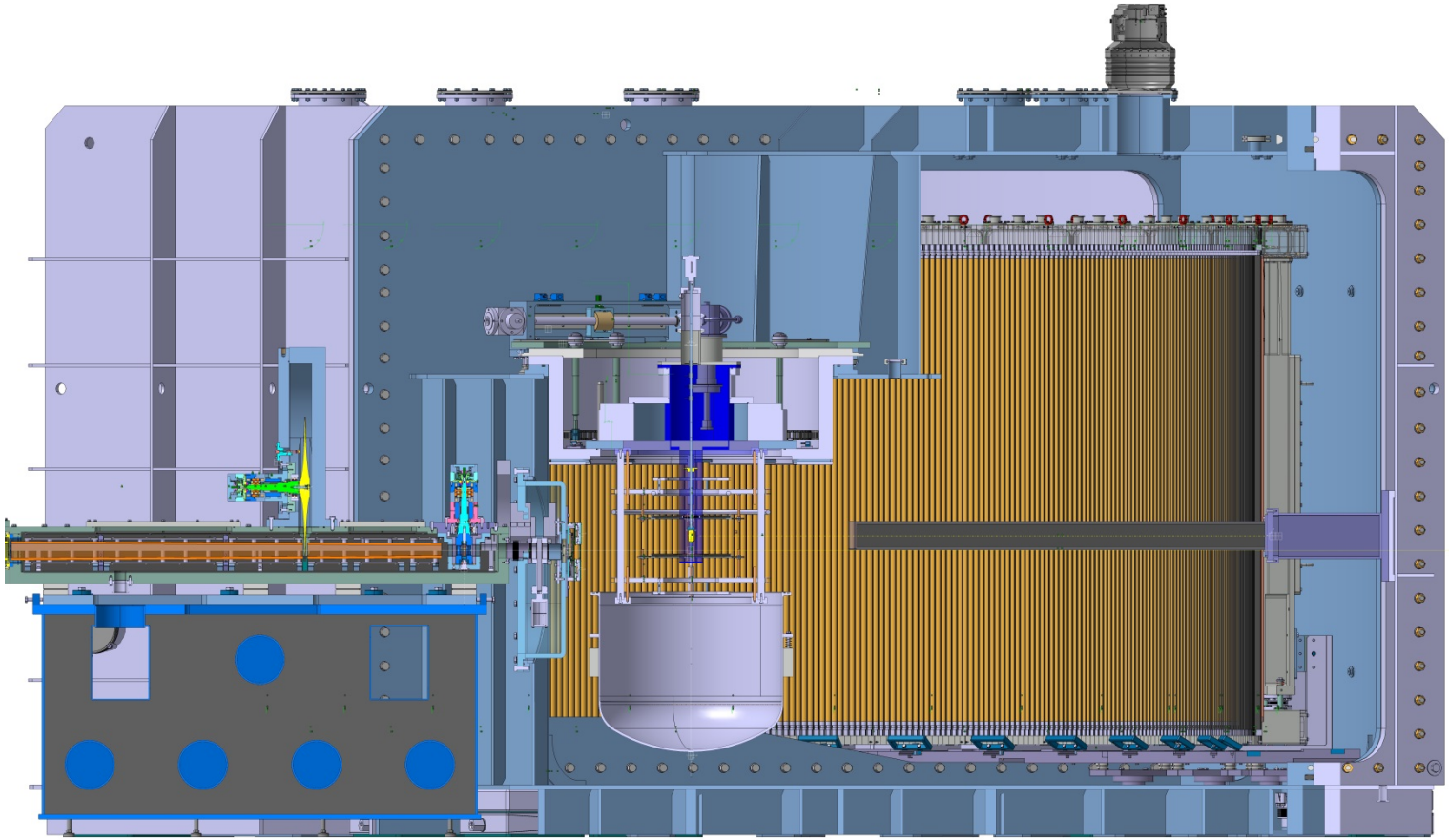

JÜLICH Forschungszentrum

INSTRUMENT EXAMPLE - TOPAS

Vacuum system test vessel

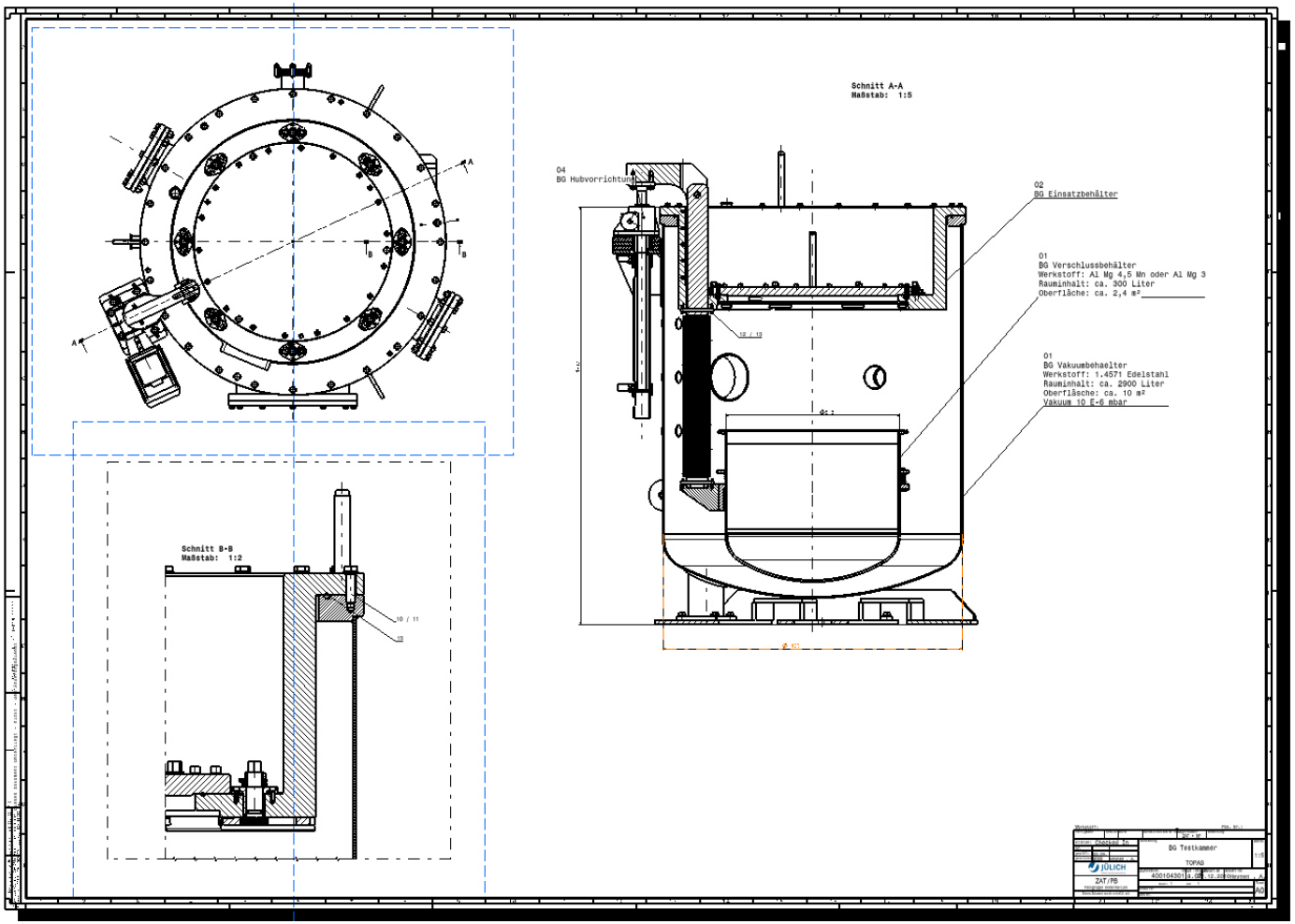

JÜLICH Forschungszentrum

INSTRUMENT EXAMPLE - TOPAS

Sample vessel locking mechanism

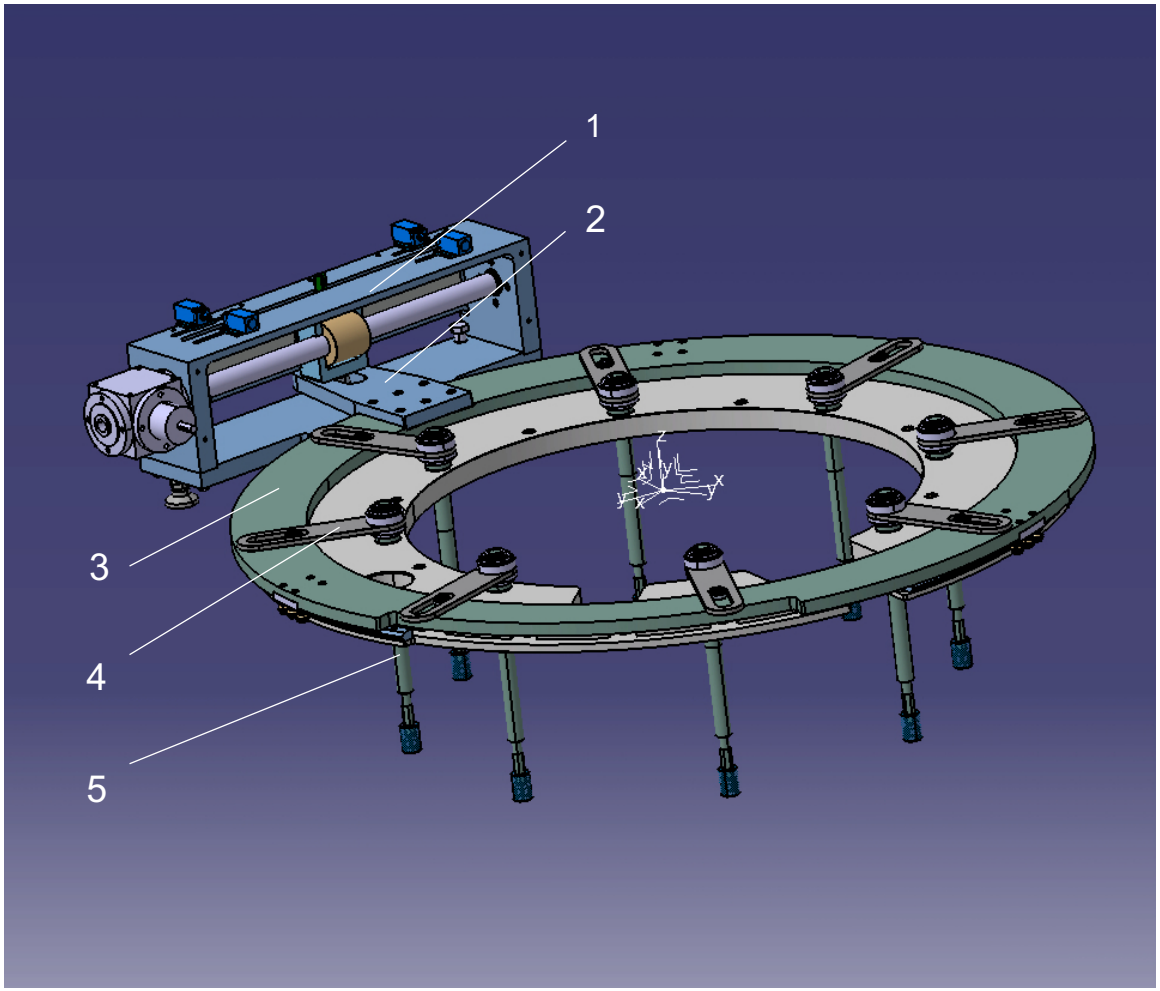

Automatic locking of sample vessel

1. Linear drive
2. Operating lever
3. Operating ring
4. Locking lever
5. Drive shaft

Function:
The linear drive moves the operating lever, connected to the operating ring.
The operating ring moves the locking levers rotating the drive shaft. The shaft is connected to the locks of the vessel

JÜLICH Forschungszentrum

INSTRUMENT EXAMPLE - TOPAS

Sample vessel locking mechanism

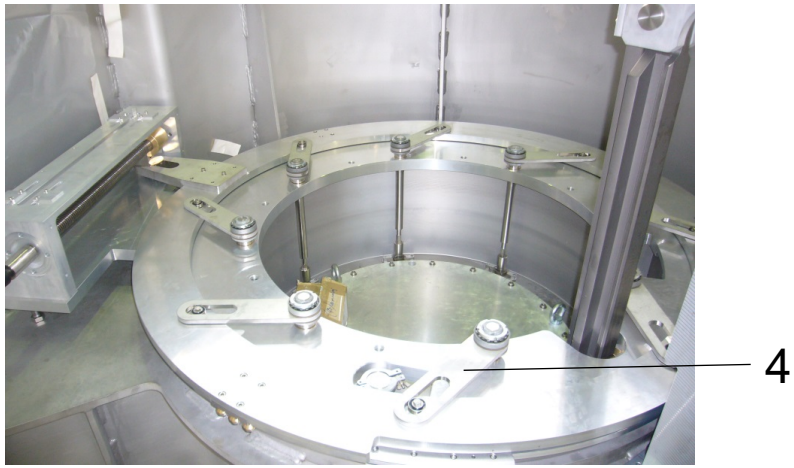

1. Linear drive
2. Operating lever
3. Operating ring
4. Locking lever
5. Drive shaft

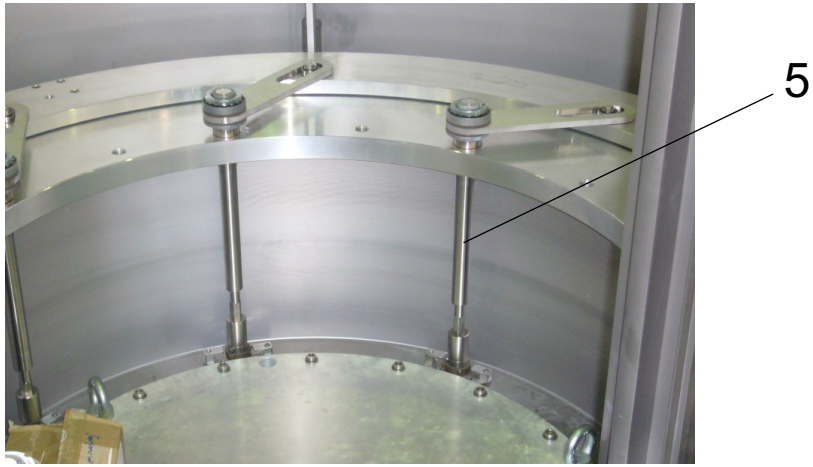

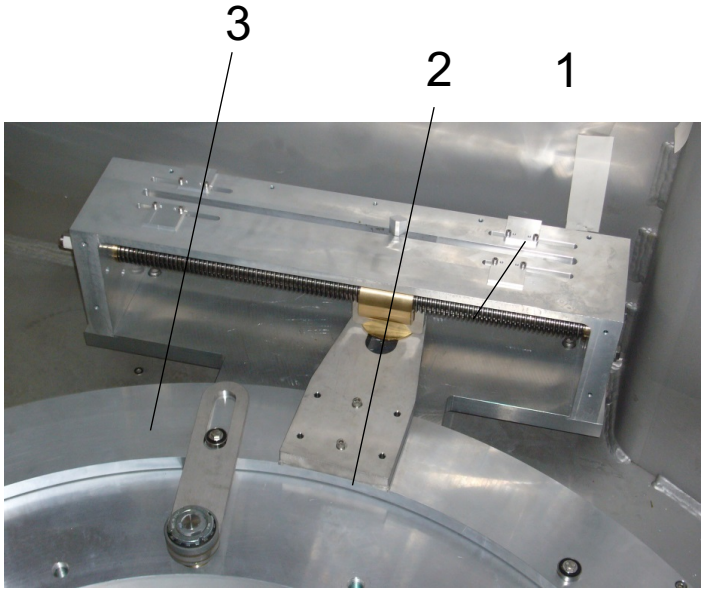

JÜLICH Forschungszentrum

INSTRUMENT EXAMPLE - TOPAS

Simplified vacuum system

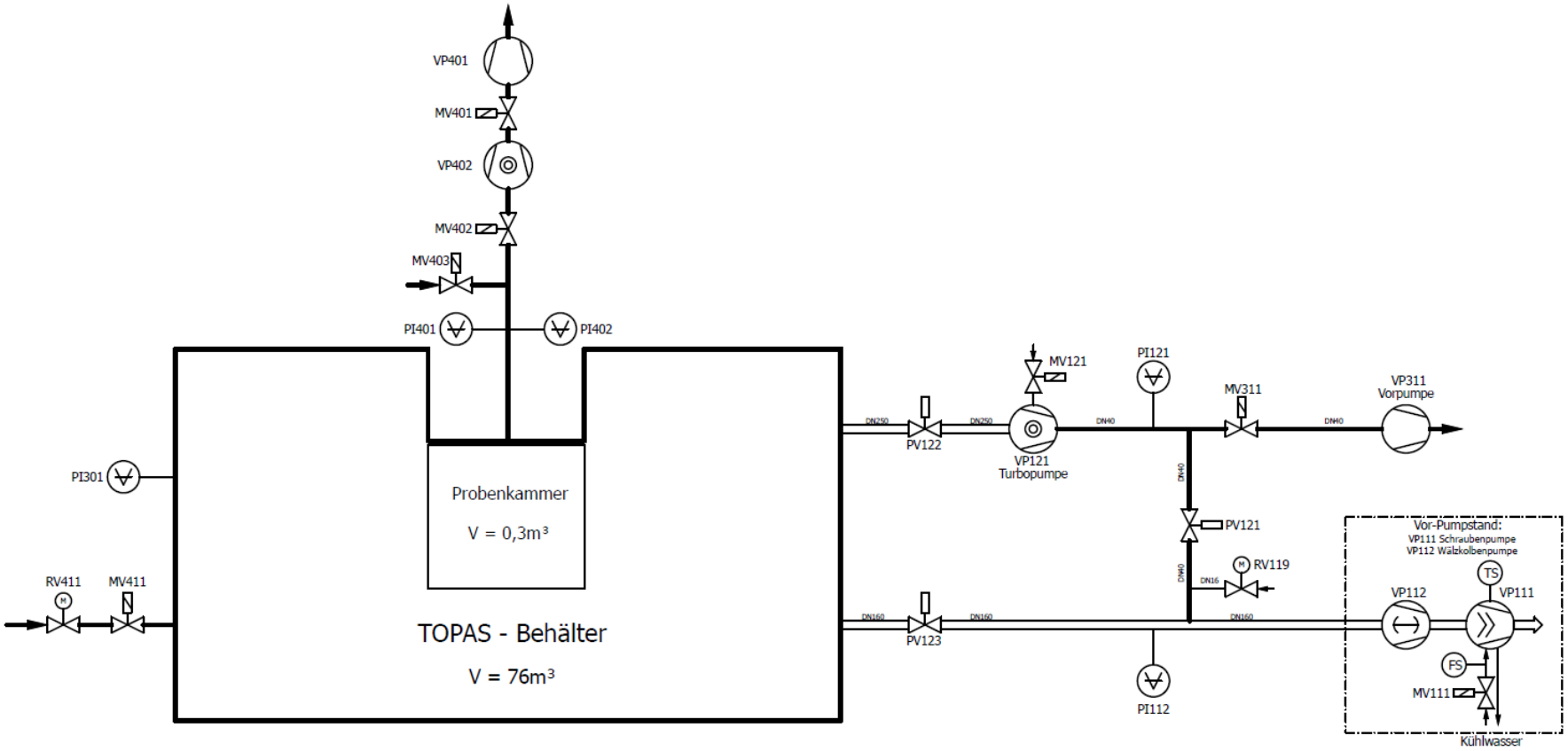

JÜLICH Forschungszentrum

INSTRUMENT EXAMPLE - TOPAS

Manufacturing

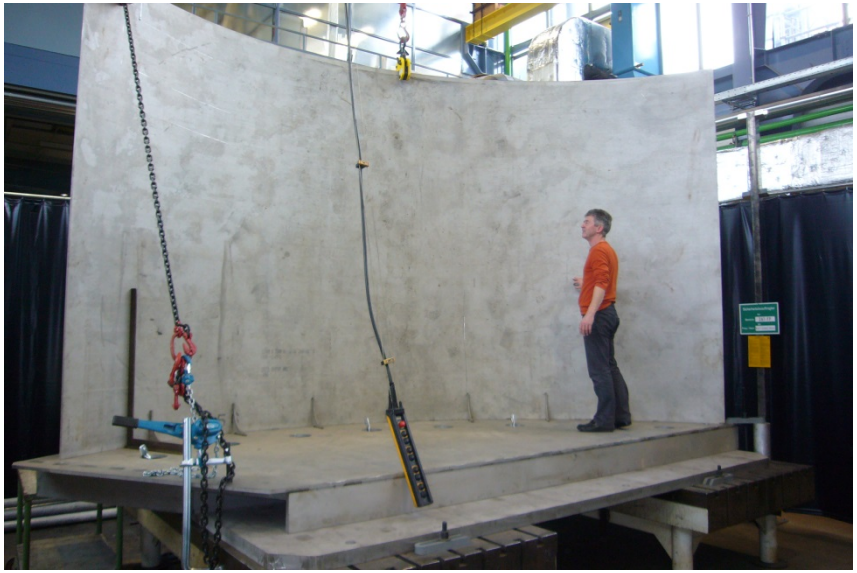

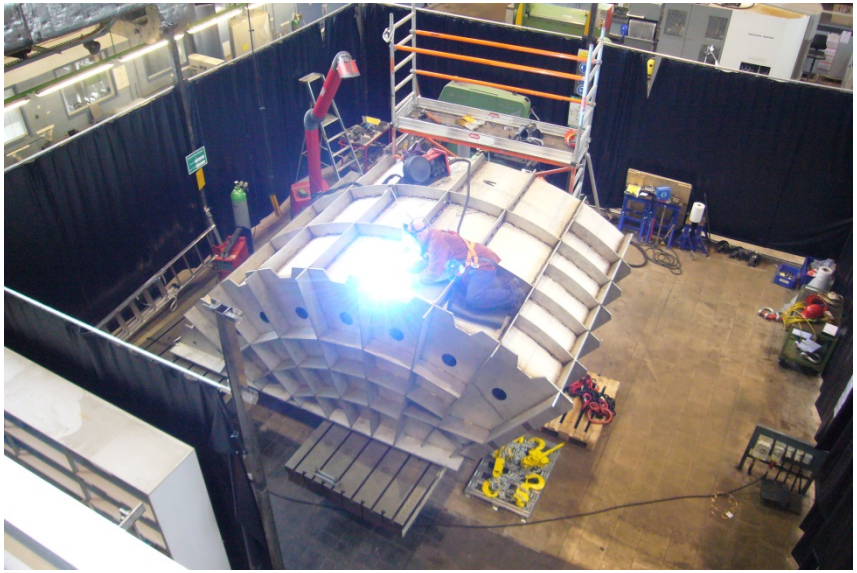

JÜLICH Forschungszentrum

INSTRUMENT EXAMPLE - TOPAS

Manufacturing

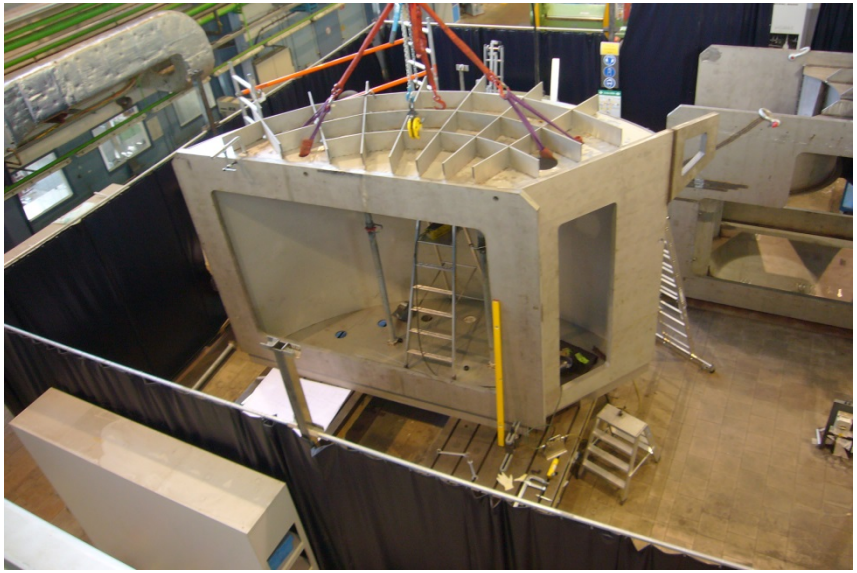

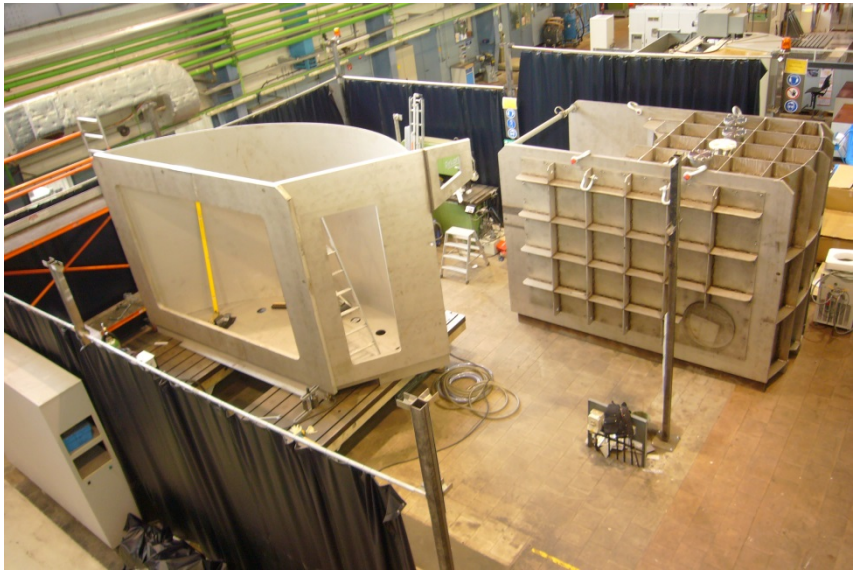

JÜLICH Forschungszentrum

INSTRUMENT EXAMPLE - TOPAS

Leakage Test

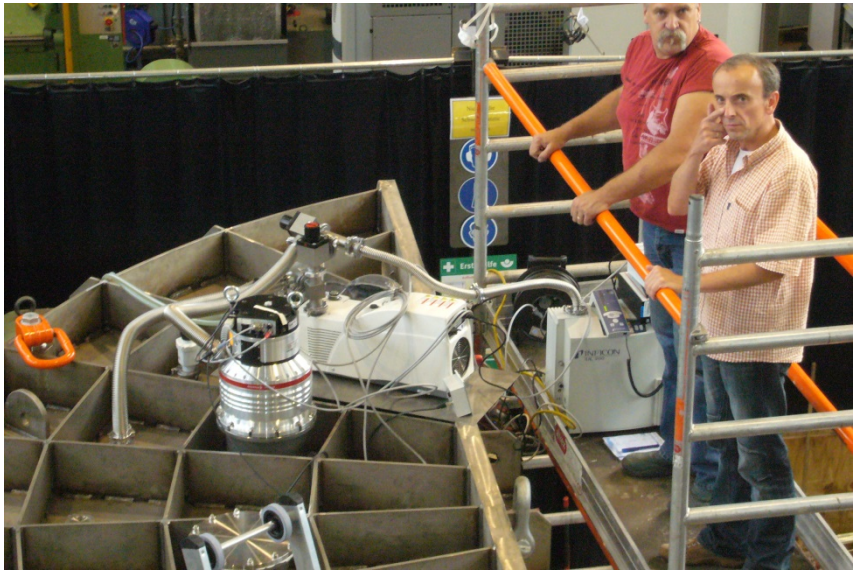

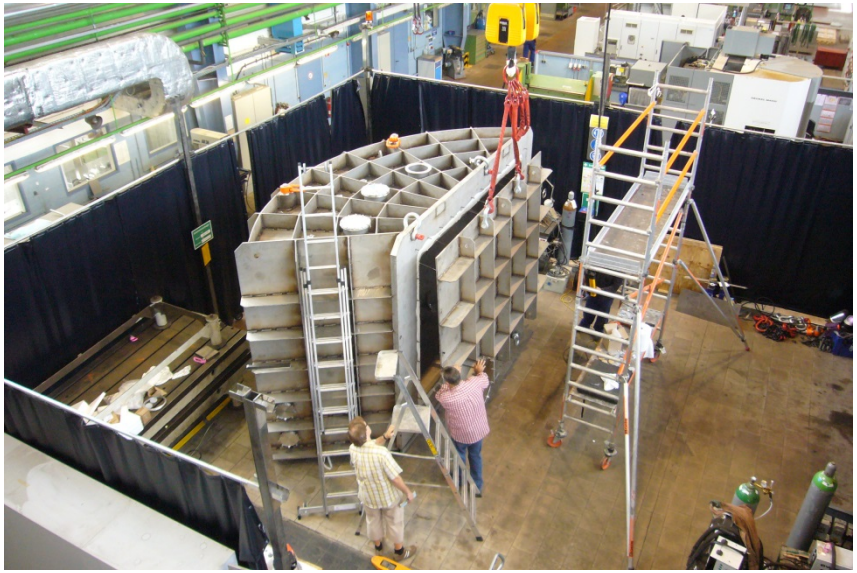

JÜLICH Forschungszentrum

INSTRUMENT EXAMPLE - TOPAS

Flange Machining – Company Kinkele

JÜLICH Forschungszentrum

INSTRUMENT EXAMPLE - TOPAS

Assembly in Jülich

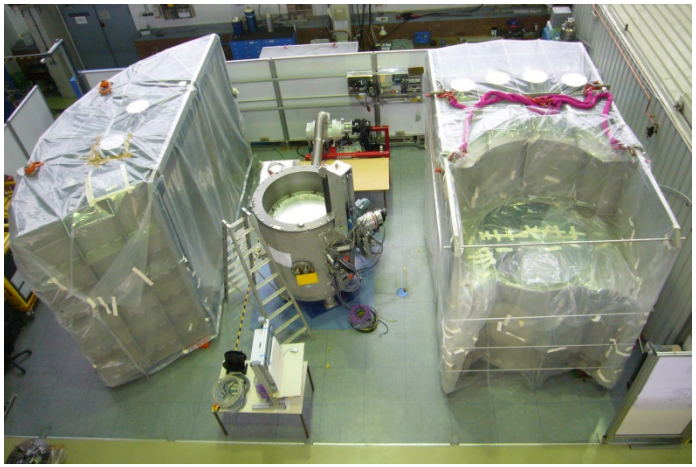

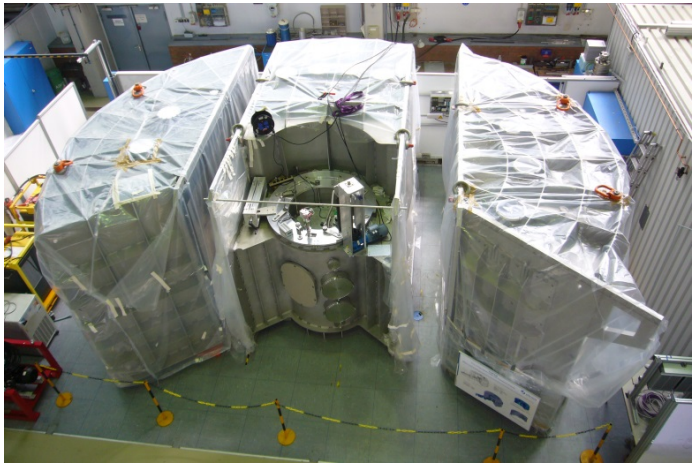

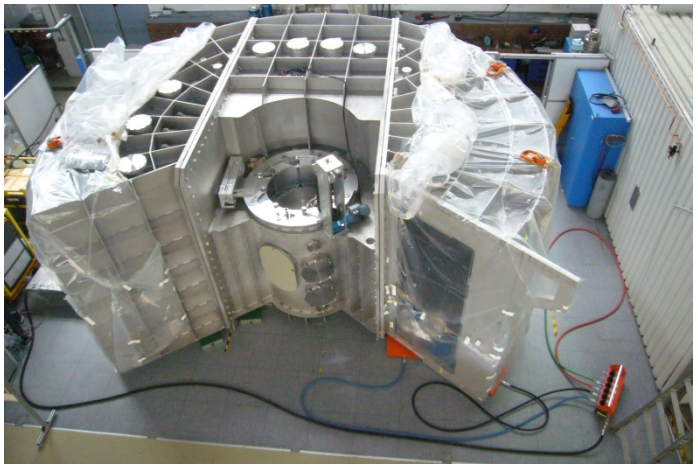

JÜLICH Forschungszentrum

INSTRUMENT EXAMPLE - TOPAS

Assembly in Jülich

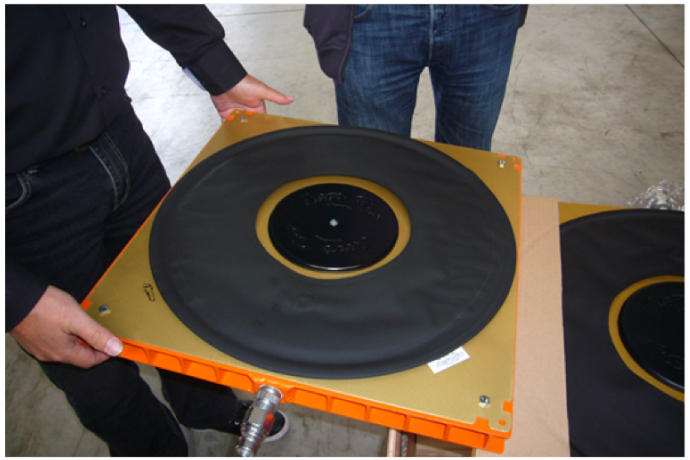

JÜLICH Forschungszentrum

INSTRUMENT EXAMPLE - TOPAS

Assembly in Jülich

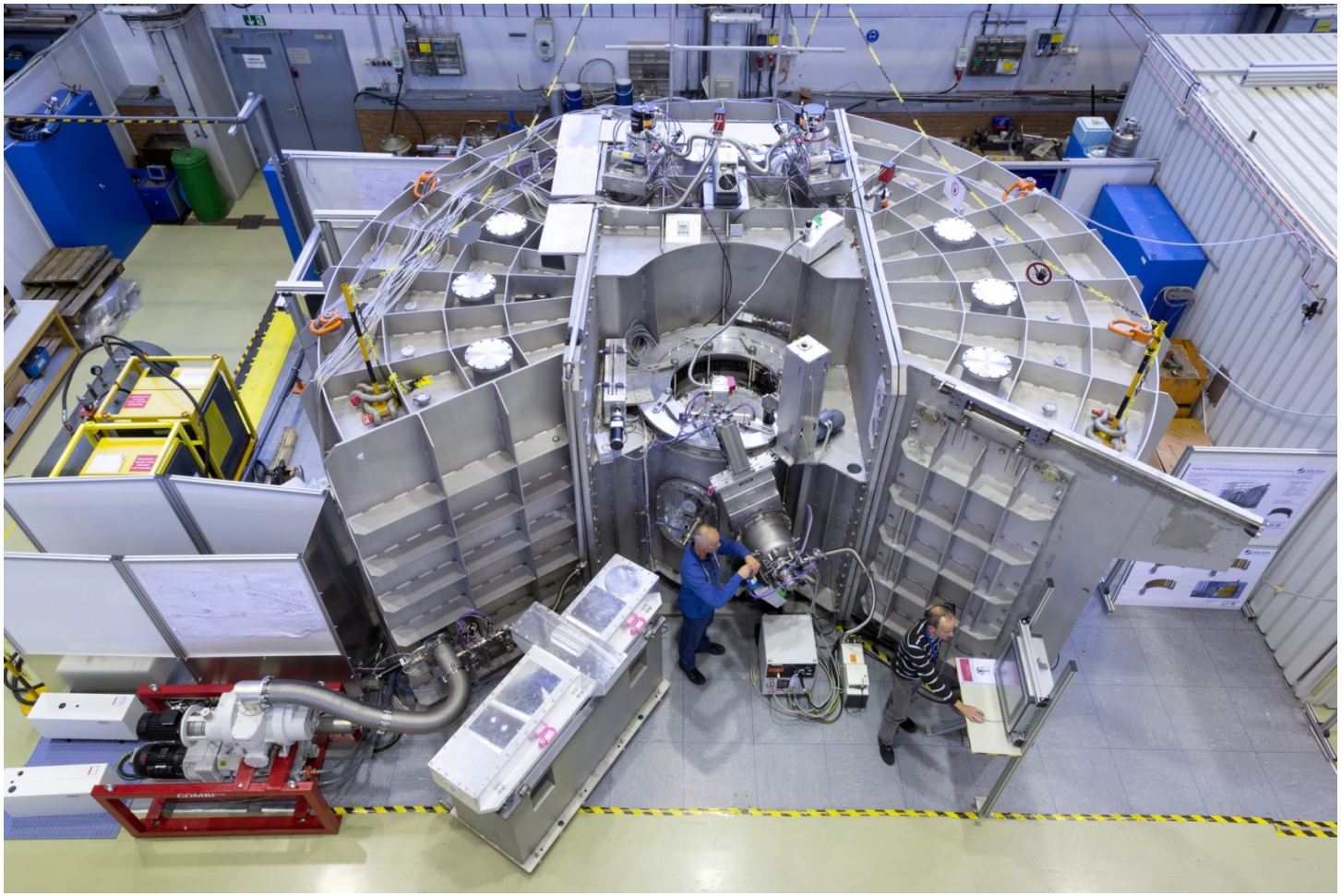

JÜLICH Forschungszentrum

INSTRUMENT EXAMPLE - TOPAS

Disassembly after test phase

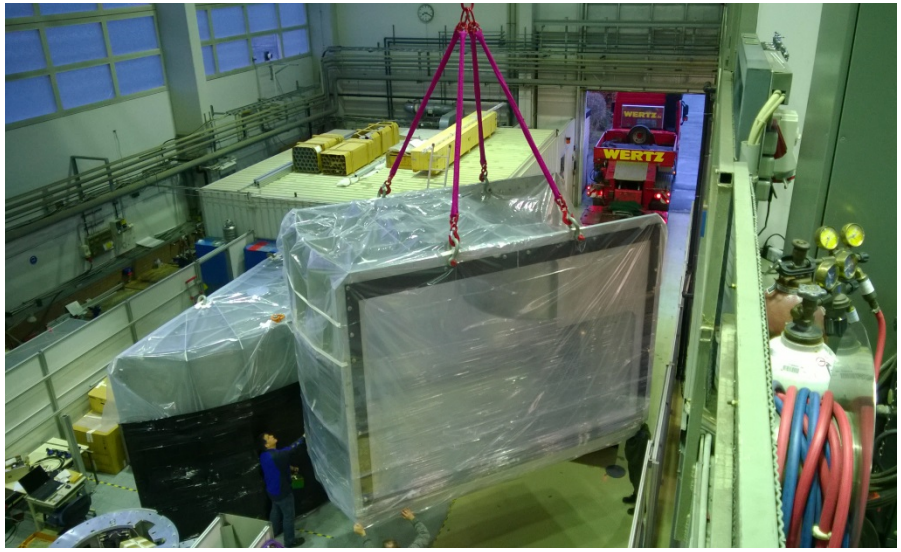

JÜLICH Forschungszentrum

INSTRUMENT EXAMPLE - TOPAS

Transport to Munich

JÜLICH Forschungszentrum

INSTRUMENT EXAMPLE - TOPAS

Final assembly in Guide Hall

JÜLICH Forschungszentrum

INSTRUMENT EXAMPLE - TOPAS

Final assembly in Guide Hall

JÜLICH Forschungszentrum

THANK YOU !

JÜLICH Forschungszentrum

AND …

… special thanks to Hans Kämmerling, project engineer for TOPAS at ZEA-1, for all his work in the project and for his contribution to this presentation

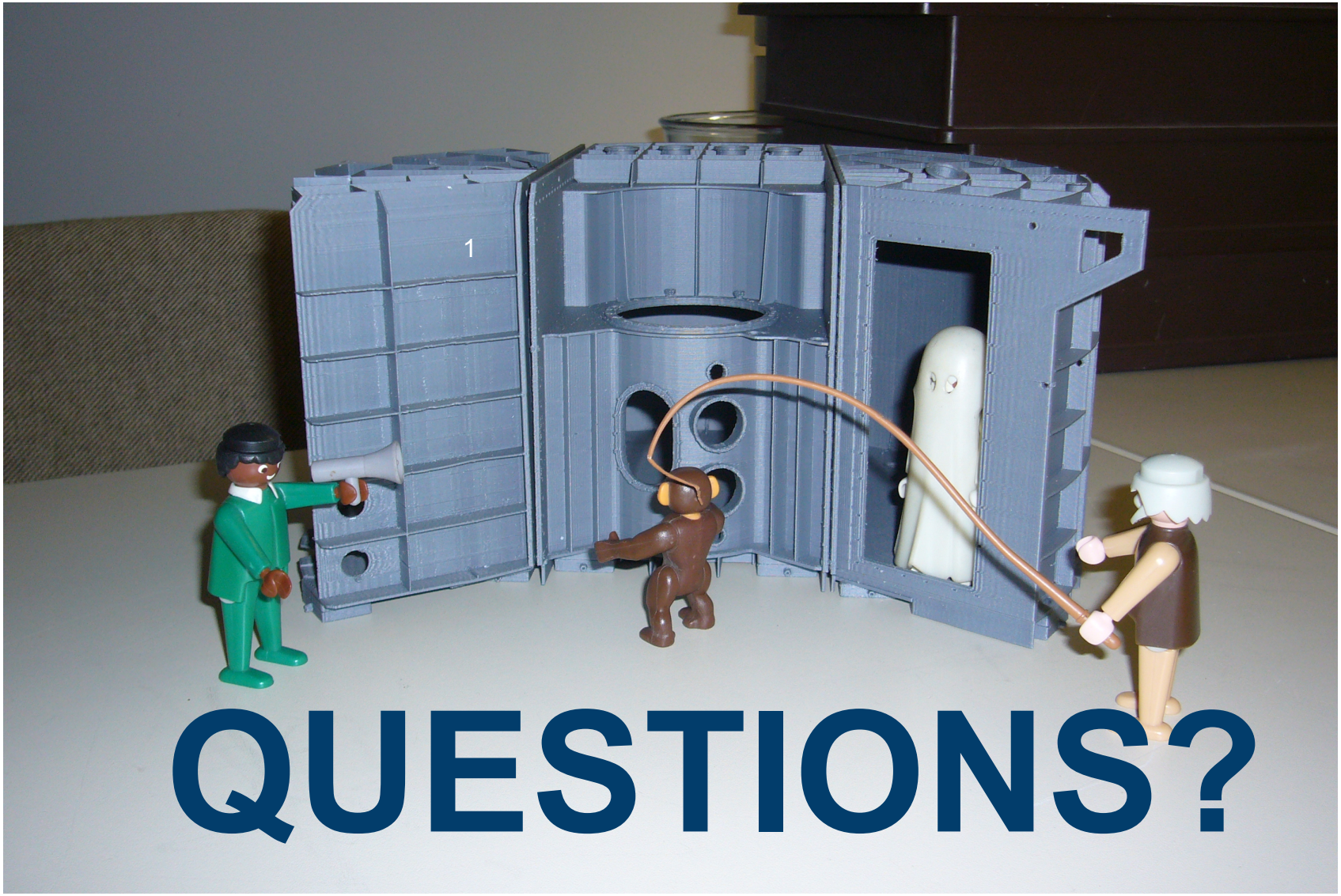

JÜLICH Forschungszentrum